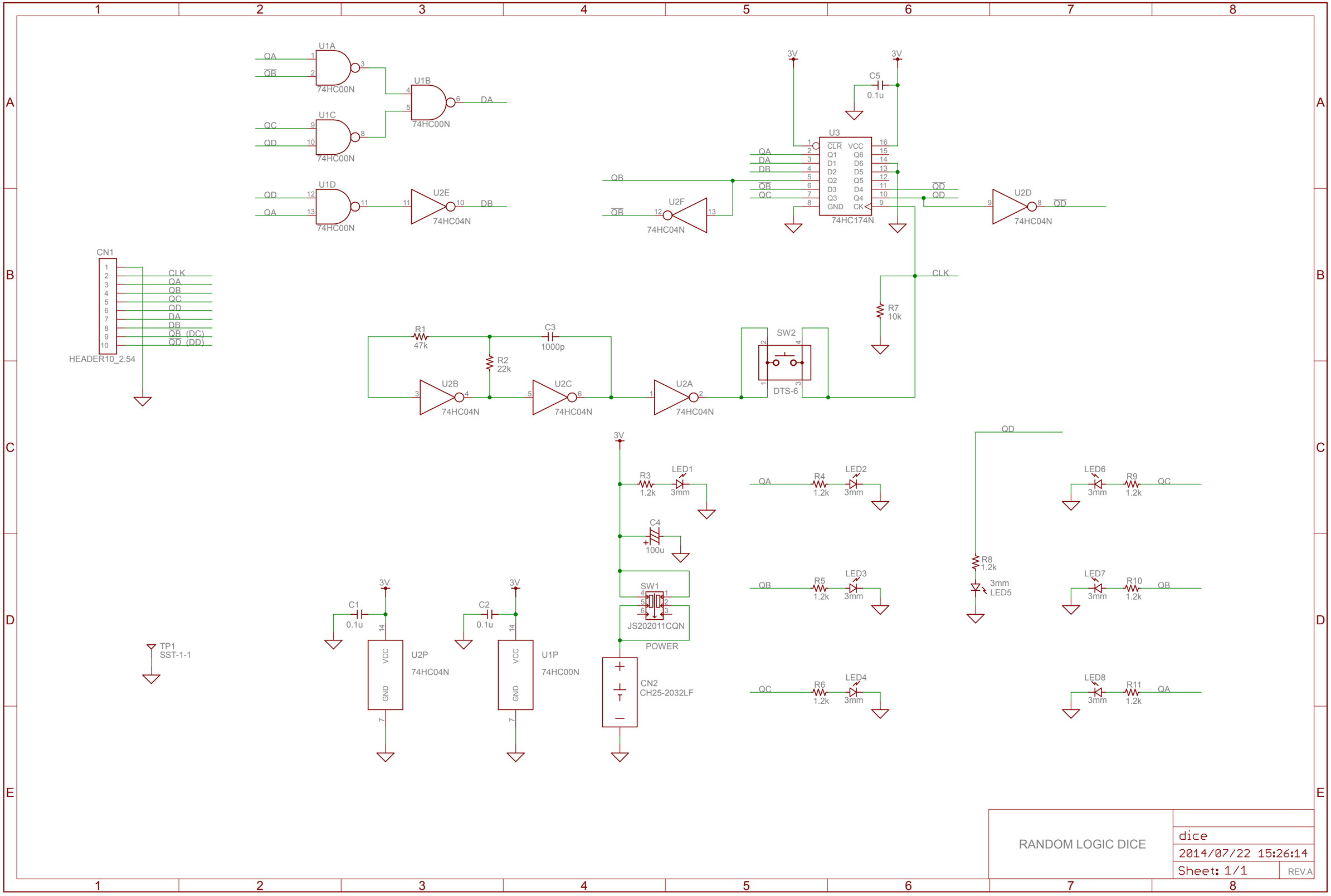
U1A
74HC00N
U1B
74HC00N
U1C
74HC00N
U1D
74HC00N
U2E
74HC04N
U2F
74HC04N
U3
74HC174N
U2D
74HC04N
CN1
HEADER10_2.54
CLK
QA
QB
QC
QD
DA
DB
QB (DC)
QD (DD)
R1
47k
R2
22k
C3
1000p
U2B
74HC04N
U2C
74HC04N
U2A
74HC04N
SW2
DTS-6
R7
10k
C5
0.1u
3V
R3
1.2k
LED1
3mm
C4
100u
SW1
JS202011CQN
POWER
CN2
CH25-2032LF
R4
1.2k
LED2
R5
1.2k
LED3
R6
1.2k
LED4
R8
1.2k
LED5
LED6
R9
1.2k
LED7
R10
1.2k
LED8
R11
1.2k
C1
0.1u
C2
0.1u
U2P
74HC04N
U1P
74HC00N
TP1
SST-1-1
RANDOM LOGIC DICE
dice
2014/07/22 15:26:14
Sheet: 1/1
REV.A